NOTICE: When inspecting or repairing the SRS, perform service in accordance with the following precautionary instructions and the procedure, and precautions in the Repair Manual applicable for the model year.

- Malfunction symptoms of the SRS are difficult to confirm, so the DTCs become the most important source of information when troubleshooting. When troubleshooting the SRS, always inspect the DTCs before disconnecting the battery.
- **Work must be started more than 90 seconds after the ignition SW is turned to the ”LOCK” position and the negative (–) terminal cable is disconnected from the battery.**
  (The SRS is equipped with a back–up power source so that if work is started within 90 seconds from disconnecting the negative (–) terminal cable of the battery, the SRS may deploy.)
- When the negative (–) terminal cable is disconnected from the battery, the memory of the clock and audio system will be cleared. So before starting work, make a record of the contents in the audio memory system. When work is finished, reset the audio systems as they were before and adjust the clock. Some vehicles have power tilt steering, power telescopic steering, power seat and power outside rear view mirror which are all equipped with memory function. However, it is not possible to make a record of these memory contents. So when the work is finished, it will be necessary to explain it to your customer, and ask the customer to adjust the features and reset the memory. To avoid erasing the memory in each system, never use a back–up power supply from outside the vehicle.
- Before repair, remove the airbag sensor if shocks are likely to be applied to the sensor during repair.
- Do not expose the following parts directly to hot air or flame;
- Even in cases of a minor collision where the SRS does not deploy, the following parts should be inspected;
- Never use SRS parts from another vehicle. When replacing parts, replace with new parts.
- For the purpose of reuse, never disassemble and repair the following parts.
- If the following parts have been dropped, or have cracks, dents and other defects in their case, bracket, and connector, replace with new one.
- Use a volt/ohmmeter with high impedance (10 kΩ/V minimum) for troubleshooting electrical circuits of the system.
- Information labels are attached to the periphery of the SRS components. Follow the instructions of the notice.
- After work on the SRS is completed, check the SRS warning light.
- If the vehicle is equipped with a mobile communication system, refer to the precaution in the IN section of the Repair Manual.

* Steering wheel pad
* Front passenger airbag assembly
* Center airbag sensor assembly
* Front airbag sensor assembly

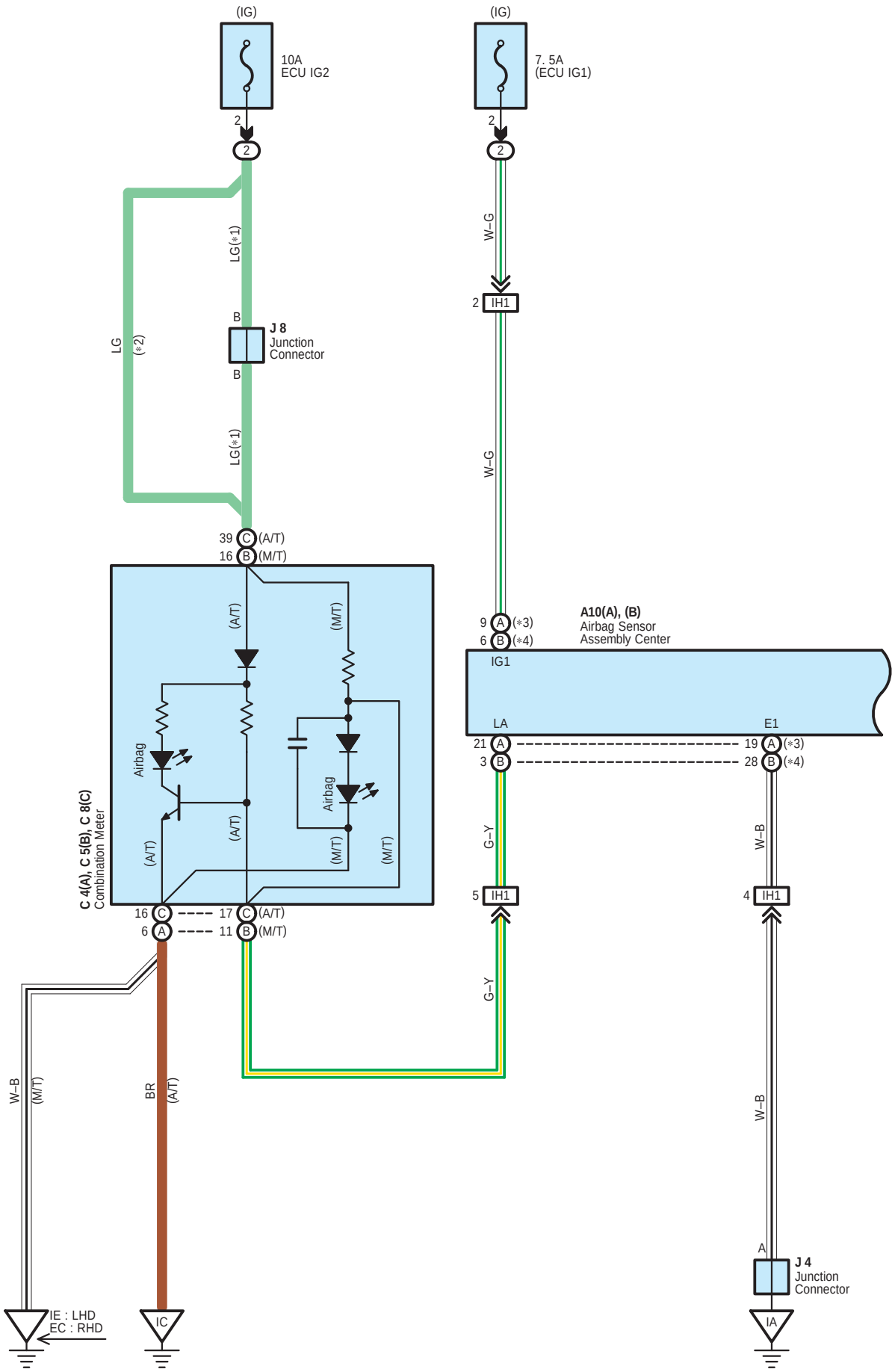
(IG)
10A
ECU IG2
2
2
LG(*1)
B
J 8
Junction
Connector
B
LG
(*2)
LG(*1)
39 C (A/T)
16 B (M/T)
(A/T)
(M/T)
Airbag
Airbag
(A/T)
(A/T)
(M/T)
(M/T)
C 4(A), C 5(B), C 8(C)
Combination Meter
16 C
6 A
17 C (A/T)
11 B (M/T)
W–B
(M/T)
BR
(A/T)
IE : LHD
EC : RHD
IC
(IG)
7. 5A
(ECU IG1)
2
2
W–G
2 IH1
W–G
9 A (*3)
6 B (*4)
IG1
A10(A), (B)
Airbag Sensor
Assembly Center
LA
E1
21 A
3 B
19 A (*3)
28 B (*4)
G–Y
W–B
5 IH1
4 IH1
G–Y
W–B
A
J 4
Junction
Connector
IA

∗ 1 : Except M/T w/o Engine Immobiliser System
∗ 2 : M/T w/o Engine Immobiliser System
∗ 3 : w/ Front Passenger' s Airbag
∗ 4 : w/o Front Passenger' s Airbag
∗ 7 : Mexico
∗ 8 : Except Mexico

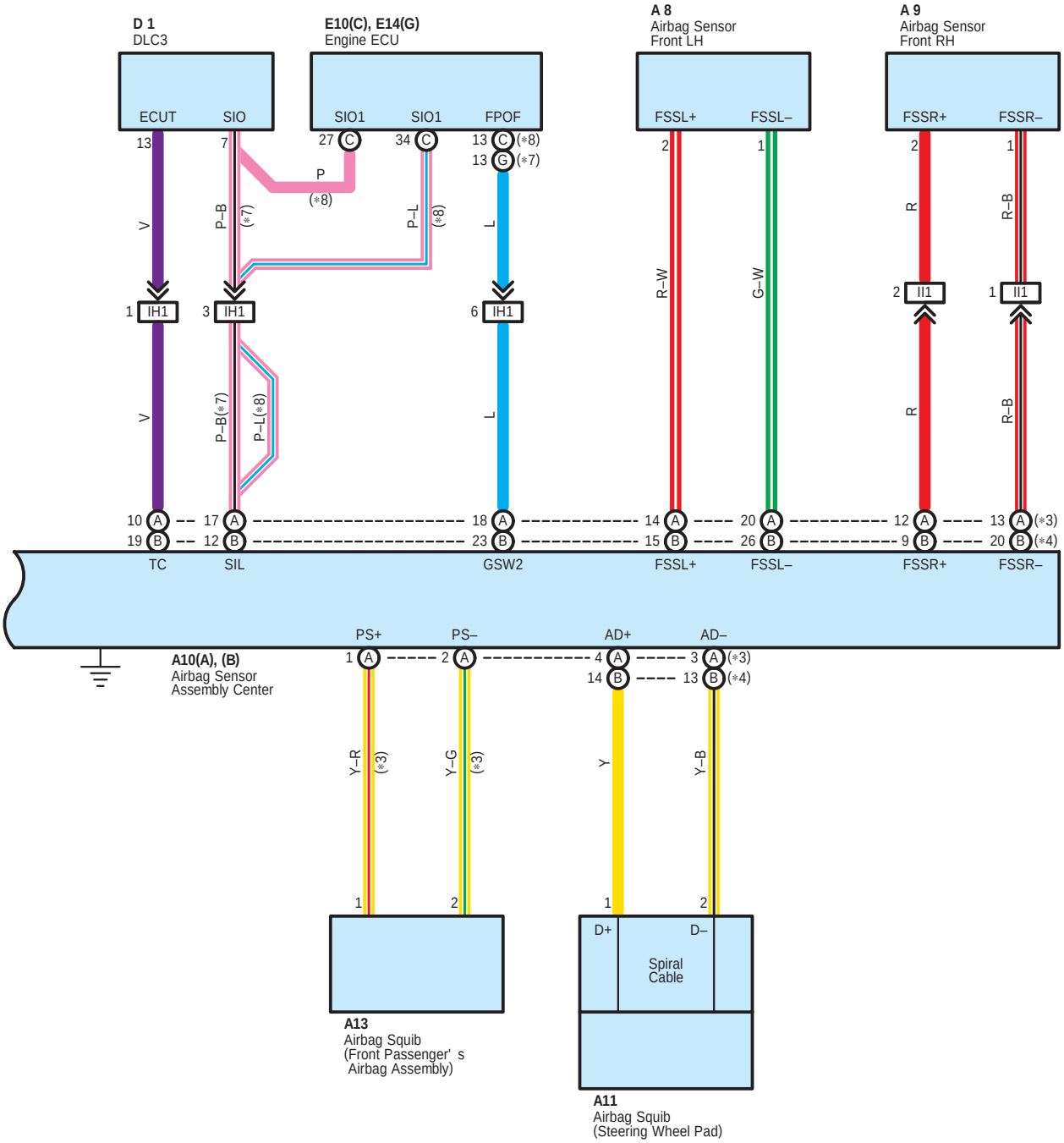

System Outline

* The system reaches an ignition judgment to deploy the following device based on the signals received from the front airbag sensor and deceleration sensor.
  – Driver Airbag
  – Front Passenger Airbag
* The airbag sensor assembly transmits a signal to the engine ECU in order to stop the fuel pump.

: Parts Location

Code		See Page	Code		See Page	Code		See Page
A8		24 (*1)	A11		28 (LHD)	D1		28 (LHD)
		32 (*3)			36 (*5)			36 (*5)
		34 (*4)	A13		28 (LHD)	E10	C	28 (LHD)
A9		24 (*1)			36 (*5)			36 (*5)
		32 (*3)	C4	A	28 (LHD)	E14	G	28 (LHD)
		34 (*4)			36 (*5)	J4		29 (LHD)
A10	A	28 (LHD)	C5	B	28 (LHD)			37 (*5)
		36 (*5)			36 (*5)	J8		29 (LHD)
	B	28 (LHD)	C8	C	28 (LHD)			37 (*5)

: Relay Blocks

Code	See Page	Relay Blocks (Relay Block Location)
2	23 (LHD)	Fuse Block (Left Kick Panel)
	23 (RHD)	Fuse Block (Right Kick Panel)

: Connector Joining Wire Harness and Wire Harness

Code	See Page	Joining Wire Harness and Wire Harness (Connector Location)
IH1	44 (LHD)	Instrument Panel Wire and Instrument Panel Wire (Instrument Panel RH)
	48 (*5)	Instrument Panel Wire and Instrument Panel Wire (Instrument Panel LH)
II1	44 (LHD)	Engine Room Main Wire and Instrument Panel Wire (Cowl Side Panel RH)
	48 (*5)	

: Ground Points

Code	See Page	Ground Points Location
EC	46 (*3)	Left Fender Apron
	47 (*4)	
IA	44 (LHD)	Right Kick Panel
	48 (*5)	Left Kick Panel
IC	44 (LHD)	Cowl Side Panel LH
IE	44 (LHD)	

* 1 : LHD 3SZ–VE * 2 : LHD K3–VE * 3 : RHD 3SZ–VE * 4 : RHD K3–VE * 5 : RHD w/ Heater * 6 : RHD w/o Heater